MITSUBISHI ELECTRIC

Changes for the Better

AIR CONDITIONING SYSTEMS

HYBRID CITY MULTI

DATA BOOK

MODEL

PLFY-WL-VEM-E

CONTENTS

PLFY-WL-VEM-E

1. SPECIFICATIONS 2
2. EXTERNAL DIMENSIONS 5
3. CENTER OF GRAVITY 6
4. ELECTRICAL WIRING DIAGRAMS 7
5. SOUND LEVELS 8
   5-1. Sound levels 8
   5-2. NC curves 9
6. TEMPERATURE/AIRFLOW DISTRIBUTIONS 10
   6-1. Temperature distributions 10
   6-2. Airflow distributions 12
7. ELECTRICAL CHARACTERISTICS 14
8. OPTIONAL PARTS 15
   8-1. Optional parts line up for the Indoor unit 15
   8-2. Air outlet shutter plate 15
   8-3. High efficiency filter element 16
   8-4. Multi-function casement 16
   8-5. 3D i-see Sensor corner panel 17
   8-6. Auto elevation panel 17
   8-7. Wireless signal receiver 18
   8-8. Space panel 18
   8-9. Duct flange for fresh air intake 18
   8-10.Plasma Quad Connect 19
   8-11.Valve kit 19
   8-12.Attachment plate 20
   8-13.6m Lead wire 20

1. SPECIFICATIONS

Model				PLFY-WL20VEM-E	PLFY-WL25VEM-E	PLFY-WL32VEM-E
Power source				1-phase 220-240 V 50Hz, 1-phase 220V 60Hz		
Cooling capacity (Nominal)		*1	kW	2.2	2.8	3.6
		*1	BTU/h	7,500	9,600	12,300
	Power input		kW	0.03	0.03	0.03
	Current input		A	0.26	0.29	0.33
Heating capacity (Nominal)		*2	kW	2.5	3.2	4.0
		*2	BTU/h	8,500	10,900	13,600
	Power input		kW	0.03	0.03	0.03
	Current input		A	0.20	0.23	0.27
External finish				Galvanized steel sheet		
External dimension H x W x D			mm	258 × 840 × 840		
			in.	10-3/16 × 33-1/16× 33-1/16		
Net weight			kg (lbs)	18(40)	18(40)	20(44)
Decoration panel	Model			**PLP-6EA**	**PLP-6EA**	**PLP-6EA**
	External finish			MUNSELL (1.0Y 9.2/0.2)		
	Dimension		mm	40 x 950 x 950		
	H x W x D		in.	1-9/16 x 37-13/32 x 37-13/32		
	Net weight		kg (lbs)	5 (11)		
Heat exchanger				Cross fin (Aluminum fin and copper tube)		
	Water Volume		L	1.0	1.0	1.8
FAN	Type x Quantity			Turbo Fan × 1	Turbo Fan × 1	Turbo Fan × 1
	External static press.		Pa (mmH_2O)	0	0	0
	Motor type			DC motor		
	Motor output		kW	0.050	0.050	0.050
	Driving mechanism			Direct-driven by motor		
	Airflow rate (Low-Mid2-Mid1-High)		m^3/min	12-13-14-15	12-13-15-17	14-15-16-17
			L/s	200-217-233-250	200-217-250-283	233-250-267-283
			cfm	424-459-494-530	424-459-530-600	494-530-565-600
Sound pressure level				(Low-Mid2-Mid1-High)	(Low-Mid2-Mid1-High)	(Low-Mid2-Mid1-High)
(measured in anechoic room)			dB <A>	24-26-27-28	24-26-28-30	26-27-29-30
Insulation material				PS		
Air filter				PP honeycomb		
Protection device				Fuse		
Refrigerant control device				-		
Connectable HBC/Hydro unit				CMB-WM-V-AA, CMB-WM-F-AA, CMB-WM-V-BB/CMH-WM-V-A		
Water piping diameter *3, *4	Connection size	Inlet	mm O.D	22	22	22
		Outlet	mm O.D	22	22	22
	Field pipe size	Inlet	mm I.D	20	20	20
		Outlet	mm I.D	20	20	20
Field drain pipe size			mm (in.)	O.D. 32 (1-1/4)		
Drawing	External			RK01N266	RK01N266	RK01N266
	Wiring			RG79Y864	RG79Y864	RG79Y864
	Refrigerant cycle			-	-	-
Standard attachment	Document			Installation Manual, Instruction Book		
	Accessory			Insulation template, Washer, Drain socket, Tie band		
Remark	Optional parts					
	Decoration panel **1			PLP-6EA	PLP-6EA	PLP-6EA
	Signal receiver panel **1			PLP-6EAL	PLP-6EAL	PLP-6EAL
	3D i-see Sensor panel **1			PLP-6EAE	PLP-6EAE	PLP-6EAE
	3D i-see Sensor and signal receiver panel **1			PLP-6EALE	PLP-6EALE	PLP-6EALE
	Auto elevation and signal receiver panel **1			PLP-6EAJ	PLP-6EAJ	PLP-6EAJ
	Auto elevation, 3D i-see Sensor and signal receiver panel **1			PLP-6EAJE	PLP-6EAJE	PLP-6EAJE
	With wireless remote controller and signal receiver panel **1			PLP-6EALM2	PLP-6EALM2	PLP-6EALM2
	With wireless remote controller, signal receiver and 3D i-see Sensor panel **1			PLP-6EALME2	PLP-6EALME2	PLP-6EALME2
	3D i-see Sensor corner panel			PAC-SE1ME-E	PAC-SE1ME-E	PAC-SE1ME-E
	Wireless signal receiver			PAR-SE9FA-E	PAR-SE9FA-E	PAR-SE9FA-E
	Valve kit		*5	PAC-SK35VK-E	PAC-SK35VK-E	PAC-SK35VK-E
		6m Lead wire		PAC-SK40LW-E	PAC-SK40LW-E	PAC-SK40LW-E
		Attachment plate		PAC-SK39AP-E	PAC-SK39AP-E	PAC-SK39AP-E
	Plasma Quad Connect			PAC-SK51FT-E	PAC-SK51FT-E	PAC-SK51FT-E
				**1.PLFY-WL-VEM-E should be used together with PLP-6EA/EAL/EAE/EALE/EAJ/EAJE/EALM2/EALME2.		
	Installation			Details on foundation work, duct work, insulation work, electrical wiring, power source switch, and other items shall be referred to the Installation Manual.		

Notes:

1.Nominal cooling conditions
Indoor: 27°CD.B./19°CW.B. (81°FD.B./66°FW.B.), Outdoor: 35°CD.B. (95°FD.B.)
Pipe length: 7.5 m (24-9/16 ft.), Level difference: 0 m (0 ft.)
2.Nominal heating conditions
Indoor: 20°CD.B. (68°FD.B.), Outdoor: 7°CD.B./6°CW.B. (45°FD.B./43°FW.B.)
Pipe length: 7.5 m (24-9/16 ft.), Level difference: 0 m (0 ft.)
3.Be sure to install a valve on the water outlet.
4.Install a strainer (40 mesh or more) on the pipe next to the valve to remove the foreign matters.
5.Certain restrictions apply to indoor unit combinations.
Refer to the section on the valve kit in the chapter "OPTIONAL PARTS" in the DATA BOOK for the restrictions.
When the valve kit is installed farther away from the HBC than the distance between the HBC and the WL-model indoor unit, the maximum allowable height difference between the HBC and the valve kit is 15 meters.
The maximum allowable piping length between the indoor unit and the valve kit is 5 meters.
*Please group units that operate on 1 branch.
*Due to continuing improvement, above specifications may be subject to change without notice.

Unit converter

BTU/h	=kW x 3,412
cfm	=m^3/min x 35.31
lbs	=kg/0.4536

*Above specification data is subject to rounding variation.

Model				PLFY-WL40VEM-E	PLFY-WL50VEM-E	PLFY-WL63VEM-E
Power source				1-phase 220-240 V 50Hz, 1-phase 220V 60Hz		
Cooling capacity (Nominal)		*1	kW	4.5	5.6	7.1
		*1	BTU/h	15,400	19,100	24,200
	Power input		kW	0.03	0.04	0.04
	Current input		A	0.35	0.40	0.40
Heating capacity (Nominal)		*2	kW	5.0	6.3	8.0
		*2	BTU/h	17,100	21,500	27,300
	Power input		kW	0.03	0.04	0.04
	Current input		A	0.29	0.34	0.34
External finish				Galvanized steel sheet		
External dimension H x W x D			mm	258 × 840 × 840		298 × 840 × 840
			in.	10-3/16 × 33-1/16× 33-1/16		11-3/4 × 33-1/16× 33-1/16
Net weight			kg (lbs)	20(44)	20(44)	23(51)
Decoration panel	Model			**PLP-6EA**	**PLP-6EA**	**PLP-6EA**
	External finish			MUNSELL (1.0Y 9.2/0.2)		
	Dimension H x W x D		mm	40 x 950 x 950		
			in.	1-9/16 x 37-13/32 x 37-13/32		
	Net weight		kg (lbs)	5 (11)		
Heat exchanger				Cross fin (Aluminum fin and copper tube)		
	Water Volume		L	1.8	1.8	2.1
FAN	Type x Quantity			Turbo Fan × 1	Turbo Fan × 1	Turbo Fan × 1
	External static press.		Pa (mmH_2O)	0	0	0
	Motor type			DC motor		
	Motor output		kW	0.050	0.050	0.120
	Driving mechanism			Direct-driven by motor		
	Airflow rate (Low-Mid2-Mid1-High)		m^3/min	14-15-16-17	14-16-18-20	15-17-19-21
			L/s	233-250-267-283	233-267-300-333	250-283-317-350
			cfm	494-530-565-600	494-565-636-706	530-600-671-742
Sound pressure level				(Low-Mid2-Mid1-High)	(Low-Mid2-Mid1-High)	(Low-Mid2-Mid1-High)
(measured in anechoic room)			dB <A>	26-28-29-31	27-29-31-33	27-29-31-33
Insulation material				PS		
Air filter				PP honeycomb		
Protection device				Fuse		
Refrigerant control device				-		
Connectable HBC/Hydro unit				CMB-WM-V-AA, CMB-WM-F-AA, CMB-WM-V-BB/CMH-WM-V-A		
Water piping diameter *3, *4	Connection size	Inlet	mm O.D	22	22	22
		Outlet	mm O.D	22	22	22
	Field pipe size	Inlet	mm I.D	20	20	30
		Outlet	mm I.D	20	20	30
Field drain pipe size			mm (in.)	O.D. 32 (1-1/4)		
Drawing	External			RK01N266	RK01N266	RK01N266
	Wiring			RG79Y864	RG79Y864	RG79Y864
	Refrigerant cycle			-	-	-
Standard attachment	Document			Installation Manual, Instruction Book		
	Accessory			Insulation template, Washer, Drain socket, Tie band		
Remark	Optional parts					
	Decoration panel **1			PLP-6EA	PLP-6EA	PLP-6EA
	Signal receiver panel **1			PLP-6EAL	PLP-6EAL	PLP-6EAL
	3D i-see Sensor panel **1			PLP-6EAE	PLP-6EAE	PLP-6EAE
	3D i-see Sensor and signal receiver panel **1			PLP-6EALE	PLP-6EALE	PLP-6EALE
	Auto elevation and signal receiver panel **1			PLP-6EAJ	PLP-6EAJ	PLP-6EAJ
	Auto elevation, 3D i-see Sensor and signal receiver panel **1			PLP-6EAJE	PLP-6EAJE	PLP-6EAJE
	With wireless remote controller and signal receiver panel **1			PLP-6EALM2	PLP-6EALM2	PLP-6EALM2
	With wireless remote controller, signal receiver and 3D i-see Sensor panel **1			PLP-6EALME2	PLP-6EALME2	PLP-6EALME2
	3D i-see Sensor corner panel			PAC-SE1ME-E	PAC-SE1ME-E	PAC-SE1ME-E
	Wireless signal receiver			PAR-SE9FA-E	PAR-SE9FA-E	PAR-SE9FA-E
	Valve kit		*5	PAC-SK35VK-E	PAC-SK35VK-E	PAC-SK35VK-E
		6m Lead wire		PAC-SK40LW-E	PAC-SK40LW-E	PAC-SK40LW-E
		Attachment plate		PAC-SK39AP-E	PAC-SK39AP-E	PAC-SK39AP-E
	Plasma Quad Connect			PAC-SK51FT-E	PAC-SK51FT-E	PAC-SK51FT-E
				**1.PLFY-WL-VEM-E should be used together with PLP-6EA/EAL/EAE/EALE/EAJ/EAJE/EALM2/EALME2.		
	Installation			Details on foundation work, duct work, insulation work, electrical wiring, power source switch, and other items shall be referred to the Installation Manual.		

Notes:

1.Nominal cooling conditions
Indoor: 27°CD.B./19°CW.B. (81°FD.B./66°FW.B.), Outdoor: 35°CD.B. (95°FD.B.)
Pipe length: 7.5 m (24-9/16 ft.), Level difference: 0 m (0 ft.)
2.Nominal heating conditions
Indoor: 20°CD.B. (68°FD.B.), Outdoor: 7°CD.B./6°CW.B. (45°FD.B./43°FW.B.)
Pipe length: 7.5 m (24-9/16 ft.), Level difference: 0 m (0 ft.)
3.Be sure to install a valve on the water outlet.
4.Install a strainer (40 mesh or more) on the pipe next to the valve to remove the foreign matters.
5.Certain restrictions apply to indoor unit combinations.
Refer to the section on the valve kit in the chapter "OPTIONAL PARTS" in the DATA BOOK for the restrictions.
When the valve kit is installed farther away from the HBC than the distance between the HBC and the WL-model indoor unit, the maximum allowable height difference between the HBC and the valve kit is 15 meters.
The maximum allowable piping length between the indoor unit and the valve kit is 5 meters.
*Please group units that operate on 1 branch.
*Due to continuing improvement, above specifications may be subject to change without notice.

Unit converter

BTU/h =kW x 3,412
cfm =m^3/min x 35.31
lbs =kg/0.4536

*Above specification data is subject to rounding variation.

1. SPECIFICATIONS

Model				PLFY-WL80VEM-E	PLFY-WL100VEM-E	PLFY-WL125VEM-E
Power source				1-phase 220-240 V 50Hz, 1-phase 220V 60Hz		
Cooling capacity (Nominal)		*1	kW	9.0	11.2	14.0
		*1	BTU/h	30,700	38,200	47,800
	Power input		kW	0.05	0.08	0.11
	Current input		A	0.46	0.66	1.05
Heating capacity (Nominal)		*2	kW	10.0	12.5	16.0
		*2	BTU/h	34,100	42,700	54,600
	Power input		kW	0.05	0.08	0.11
	Current input		A	0.40	0.60	0.99
External finish				Galvanized steel sheet		
External dimension H x W x D			mm	298 × 840 × 840		
			in.	11-3/4 × 33-1/16× 33-1/16		
Net weight			kg (lbs)	23(51)	23(51)	25(55)
Decoration panel	Model			**PLP-6EA**	**PLP-6EA**	**PLP-6EA**
	External finish			MUNSELL (1.0Y 9.2/0.2)		
	Dimension H x W x D		mm	40 x 950 x 950		
			in.	1-9/16 x 37-13/32 x 37-13/32		
	Net weight		kg (lbs)	5 (11)		
Heat exchanger				Cross fin (Aluminum fin and copper tube)		
	Water Volume		L	2.1	2.2	3.1
FAN	Type x Quantity			Turbo Fan × 1	Turbo Fan × 1	Turbo Fan × 1
	External static press.		Pa (mmH_2O)	0	0	0
	Motor type			DC motor		
	Motor output		kW	0.120	0.120	0.120
	Driving mechanism			Direct-driven by motor		
	Airflow rate (Low-Mid2-Mid1-High)		m^3/min	15-18-21-23	19-23-26-30	20-25-30-35
			L/s	250-300-350-383	317-383-433-500	333-417-500-583
			cfm	530-636-742-812	671-812-918-1059	706-883-1059-1236
Sound pressure level				(Low-Mid2-Mid1-High)	(Low-Mid2-Mid1-High)	(Low-Mid2-Mid1-High)
(measured in anechoic room)			dB <A>	27-30-33-35	31-35-37-40	33-37-40-46
Insulation material				PS		
Air filter				PP honeycomb		
Protection device				Fuse		
Refrigerant control device				-		
Connectable HBC/Hydro unit				CMB-WM-V-AA, CMB-WM-F-AA, CMB-WM-V-BB/CMH-WM-V-A		
Water piping diameter *3, *4	Connection size	Inlet	mm O.D	22	22	22
		Outlet	mm O.D	22	22	22
	Field pipe size	Inlet	mm I.D	30	30	30
		Outlet	mm I.D	30	30	30
Field drain pipe size			mm (in.)	O.D. 32 (1-1/4)		
Drawing	External			RK01N266	RK01N266	RK01N266
	Wiring			RG79Y864	RG79Y864	RG79Y864
	Refrigerant cycle			-	-	-
Standard attachment	Document			Installation Manual, Instruction Book		
	Accessory			Insulation template, Washer, Drain socket, Tie band		
Remark	Optional parts					
	Decoration panel **1			PLP-6EA	PLP-6EA	PLP-6EA
	Signal receiver panel **1			PLP-6EAL	PLP-6EAL	PLP-6EAL
	3D i-see Sensor panel **1			PLP-6EAE	PLP-6EAE	PLP-6EAE
	3D i-see Sensor and signal receiver panel **1			PLP-6EALE	PLP-6EALE	PLP-6EALE
	Auto elevation and signal receiver panel **1			PLP-6EAJ	PLP-6EAJ	PLP-6EAJ
	Auto elevation, 3D i-see Sensor and signal receiver panel **1			PLP-6EAJE	PLP-6EAJE	PLP-6EAJE
	With wireless remote controller and signal receiver panel **1			PLP-6EALM2	PLP-6EALM2	PLP-6EALM2
	With wireless remote controller, signal receiver and 3D i-see Sensor panel **1			PLP-6EALME2	PLP-6EALME2	PLP-6EALME2
	3D i-see Sensor corner panel			PAC-SE1ME-E	PAC-SE1ME-E	PAC-SE1ME-E
	Wireless signal receiver			PAR-SE9FA-E	PAR-SE9FA-E	PAR-SE9FA-E
	Valve kit		*5	PAC-SK35VK-E	PAC-SK35VK-E	PAC-SK35VK-E
		6m Lead wire		PAC-SK40LW-E	PAC-SK40LW-E	PAC-SK40LW-E
		Attachment plate		PAC-SK39AP-E	PAC-SK39AP-E	PAC-SK39AP-E
	Plasma Quad Connect			PAC-SK51FT-E	PAC-SK51FT-E	PAC-SK51FT-E
				**1.PLFY-WL-VEM-E should be used together with PLP-6EA/EAL/EAE/EALE/EAJ/EAJE/EALM2/EALME2.		
	Installation			Details on foundation work, duct work, insulation work, electrical wiring, power source switch, and other items shall be referred to the Installation Manual.		

Notes:

1.Nominal cooling conditions
Indoor: 27°CD.B./19°CW.B. (81°FD.B./66°FW.B.), Outdoor: 35°CD.B. (95°FD.B.)
Pipe length: 7.5 m (24-9/16 ft.), Level difference: 0 m (0 ft.)
2.Nominal heating conditions
Indoor: 20°CD.B. (68°FD.B.), Outdoor: 7°CD.B./6°CW.B. (45°FD.B./43°FW.B.)
Pipe length: 7.5 m (24-9/16 ft.), Level difference: 0 m (0 ft.)
3.Be sure to install a valve on the water outlet.
4.Install a strainer (40 mesh or more) on the pipe next to the valve to remove the foreign matters.
5.Certain restrictions apply to indoor unit combinations.
Refer to the section on the valve kit in the chapter "OPTIONAL PARTS" in the DATA BOOK for the restrictions.
When the valve kit is installed farther away from the HBC than the distance between the HBC and the WL-model indoor unit, the maximum allowable height difference between the HBC and the valve kit is 15 meters.
The maximum allowable piping length between the indoor unit and the valve kit is 5 meters.
*Please group units that operate on 1 branch.
*Due to continuing improvement, above specifications may be subject to change without notice.

Unit converter

BTU/h	=kW x 3,412
cfm	=m^3/min x 35.31
lbs	=kg/0.4536

*Above specification data is subject to rounding variation.

PLFY-WL20, 25, 32, 40, 50, 63, 80, 100, 125VEM-E

Unit: mm

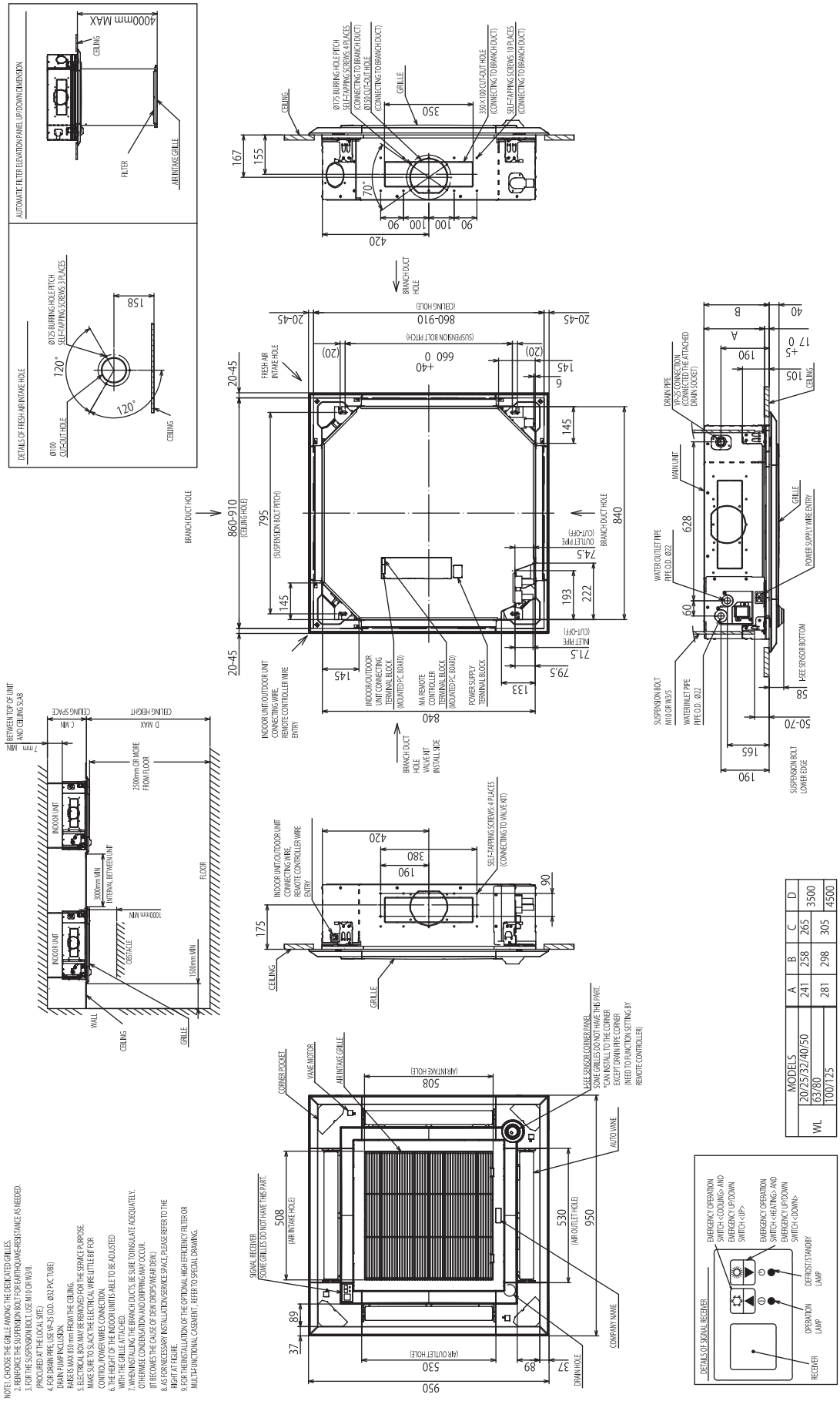

MODELS		A	B	C	D
WL	20/25/32/40/50	241	258	265	3500
	63/80	281	298	305	4500
	100/125				

PLFY-WL20, 25, 32, 40, 50, 63, 80, 100, 125VEM-E

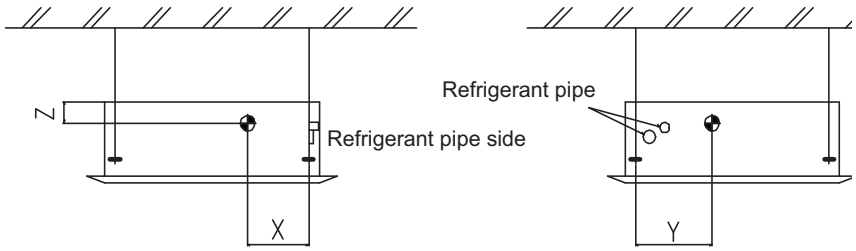

(mm)[in]

Model name	X	Y	Z
PLFY-WL20VEM-E	325 [12-13/16]	390 [15-3/8]	115 [4-17/32]
PLFY-WL25VEM-E	325 [12-13/16]	390 [15-3/8]	115 [4-17/32]
PLFY-WL32VEM-E	325 [12-13/16]	390 [15-3/8]	115 [4-17/32]
PLFY-WL40VEM-E	325 [12-13/16]	390 [15-3/8]	115 [4-17/32]
PLFY-WL50VEM-E	325 [12-13/16]	390 [15-3/8]	115 [4-17/32]
PLFY-WL63VEM-E	325 [12-13/16]	390 [15-3/8]	115 [4-17/32]
PLFY-WL80VEM-E	325 [12-13/16]	390 [15-3/8]	115 [4-17/32]
PLFY-WL100VEM-E	325 [12-13/16]	380 [14-31/32]	100 [3-15/16]
PLFY-WL125VEM-E	325 [12-13/16]	380 [14-31/32]	100 [3-15/16]

PLFY-WL20, 25, 32, 40, 50, 63, 80, 100, 125VEM-E

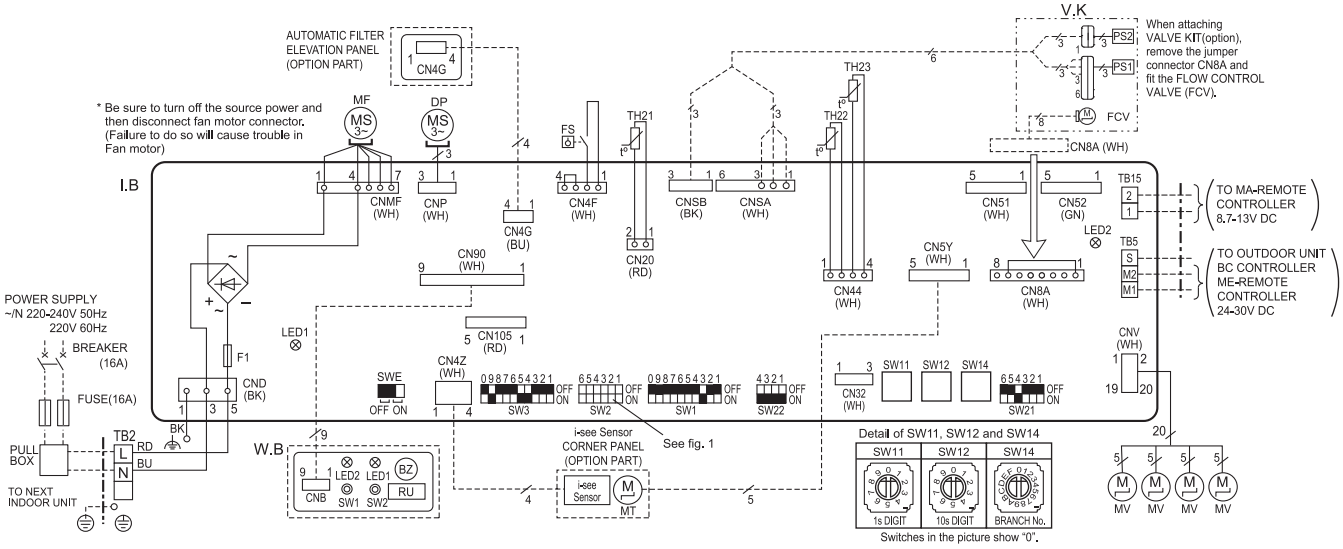

NOTES:
1. At servicing for outdoor unit, always follow the wiring diagram of outdoor unit.
2. In case of using MA-Remote controller, please connect to TB15.
   (Remote controller wire is non-polar.)
3. In case of using ME-Remote controller, please connect to TB5.
   (Transmission line is non-polar.)
4. Symbol [S]of TB5 is the shield wire connection.
5. Symbols used in wiring diagram are,
   ☐☐☐ : terminal block, ○ ○ ○ ☐ : connector.
6. The setting of SW2 differs in the capacity.
   For the detail, refer to the fig. 1.
7. Make sure to turn off the indoor and the outdoor units before replacing indoor controller board.
8. ■ is the switch position.

【LEGEND】

SYMBOL	NAME		SYMBOL	NAME	
I. B	INDOOR CONTROLLER BOARD		TH21	THERMISTOR	ROOM TEMP. DETECTION (0°C/15kΩ, 25°C/5.4kΩ)
CN32	CONNECTOR	REMOTE SWITCH			
CN51		CENTRALLY CONTROL	TH22		PIPE TEMP. DETECTION / INLET (0°C/15kΩ, 25°C/5.4kΩ)
CN52		REMOTE INDICATION			
CN105		IT TERMINAL	TH23		PIPE TEMP. DETECTION / OUTLET (0°C/15kΩ, 25°C/5.4kΩ)
F1	FUSE (T 6.3AL 250V)				
SW1	SWITCH	MODE SELECTION	TB2	TERMINAL BLOCK	POWER SUPPLY
SW2		CAPACITY CODE	TB5		TRANSMISSION
SW3		MODE SELECTION	TB15		MA-REMOTE CONTROLLER
SW11		ADDRESS SETTING 1s DIGIT	OPTION PART		
SW12		ADDRESS SETTING 10s DIGIT	W.B		PCB FOR WIRELESS REMOTE CONTROLLER
SW14		BRANCH NO.	BZ		BUZZER
SW21		CEILING HEIGHT DISCHARGE OUTLET NUMBER OPTION SELECTOR	LED1		LED (OPERATION INDICATION : GREEN)
			LED2		LED (PREPARATION FOR HEATING : ORANGE)
			RU		RECEIVING UNIT
SW22		PAIR NO. SETTING	SW1		EMERGENCY OPERATION (HEAT / DOWN)
SWE		DRAIN PUMP (TEST MODE)	SW2		EMERGENCY OPERATION (COOL / UP)
DP	DRAIN PUMP		MT		i-see Sensor MOTOR
FS	DRAIN FLOAT SWITCH		V.K		VALVE KIT
MF	FAN MOTOR		PS1		PRESSURE SENSOR 1 (INLET)
MV	VANE MOTOR		PS2		PRESSURE SENSOR 2 (OUTLET)
			FCV		FLOW CONTROL VALVE

<fig. 1> SW2 (CAPACITY CODE)

MODELS	SW2	MODELS	SW2	MODELS	SW2
WL20	ON OFF 1 2 3 4 5 6	WL25	ON OFF 1 2 3 4 5 6	WL32	ON OFF 1 2 3 4 5 6
WL40	ON OFF 1 2 3 4 5 6	WL50	ON OFF 1 2 3 4 5 6	WL63	ON OFF 1 2 3 4 5 6
WL80	ON OFF 1 2 3 4 5 6	WL100	ON OFF 1 2 3 4 5 6	WL125	ON OFF 1 2 3 4 5 6

LED on indoor board for service

Mark	Meaning	Function
LED1	Main power supply	Main Power supply (Indoor unit:220-240V AC) power on → lamp is lit
LED2	Power supply for MA-Remote controller	Power supply for MA-Remote controller on → lamp is lit

5-1. Sound levels

PLFY-WL-VEM-E

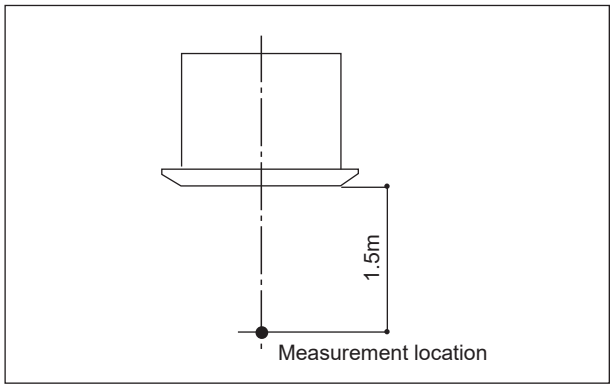

* Measured in anechoic room.

Sound level at anechoic room: Low-Mid2-Mid1-High

	Sound level dB (A)
PLFY-WL20VEM-E	24-26-27-28
PLFY-WL25VEM-E	24-26-28-30
PLFY-WL32VEM-E	26-27-29-30
PLFY-WL40VEM-E	26-28-29-31
PLFY-WL50VEM-E	27-29-31-33
PLFY-WL63VEM-E	27-29-31-33
PLFY-WL80VEM-E	27-30-33-35
PLFY-WL100VEM-E	31-35-37-40
PLFY-WL125VEM-E	33-37-40-46

5-2. NC curves

PLFY-WL20VEM-E
External Static Pressure: 0Pa [0.00in.WG]
Power Source: 220-230-240V 50Hz/220V 60Hz

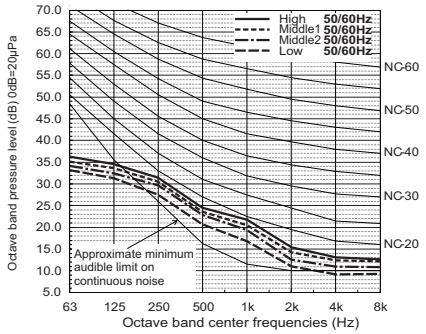

PLFY-WL25VEM-E
External Static Pressure: 0Pa [0.00in.WG]
Power Source: 220-230-240V 50Hz/220V 60Hz

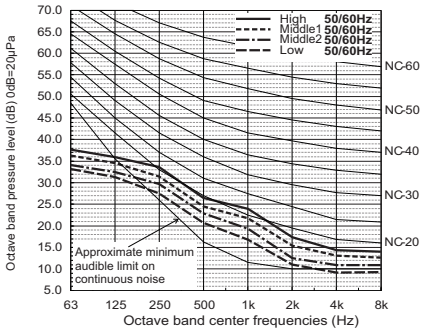

PLFY-WL32VEM-E
External Static Pressure: 0Pa [0.00in.WG]
Power Source: 220-230-240V 50Hz/220V 60Hz

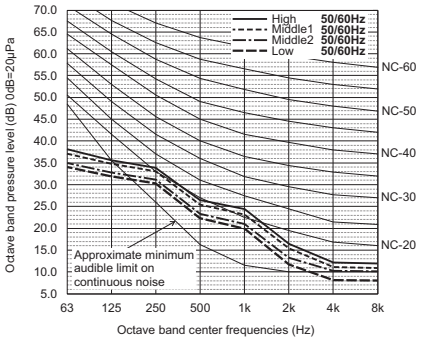

PLFY-WL40VEM-E
External Static Pressure: 0Pa [0.00in.WG]
Power Source: 220-230-240V 50Hz/220V 60Hz

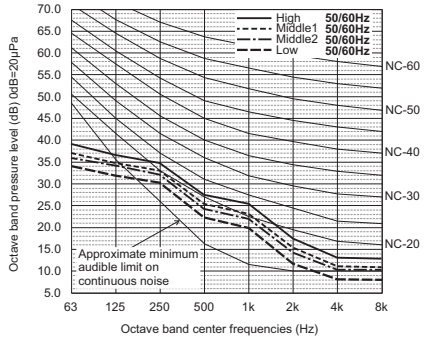

PLFY-WL50VEM-E
External Static Pressure: 0Pa [0.00in.WG]
Power Source: 220-230-240V 50Hz/220V 60Hz

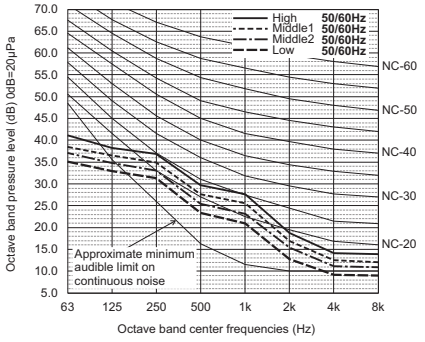

PLFY-WL63VEM-E
External Static Pressure: 0Pa [0.00in.WG]
Power Source: 220-230-240V 50Hz/220V 60Hz

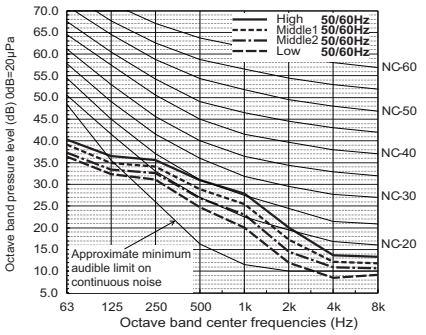

PLFY-WL80VEM-E
External Static Pressure: 0Pa [0.00in.WG]
Power Source: 220-230-240V 50Hz/220V 60Hz

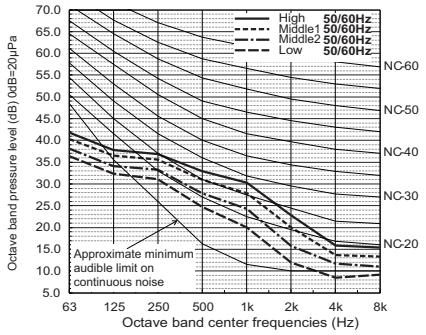

PLFY-WL100VEM-E
External Static Pressure: 0Pa [0.00in.WG]
Power Source: 220-230-240V 50Hz/220V 60Hz

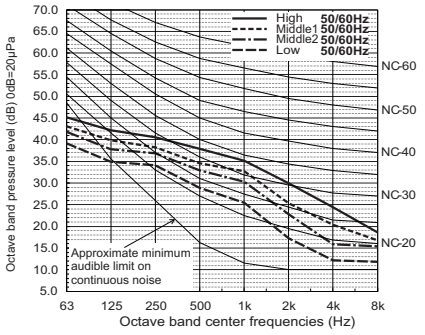

PLFY-WL125VEM-E
External Static Pressure: 0Pa [0.00in.WG]
Power Source: 220-230-240V 50Hz/220V 60Hz

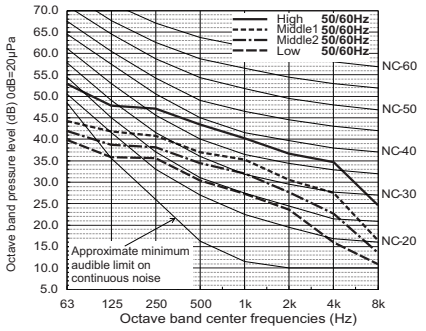

6-1. Temperature distributions

• PLFY-WL32, 40VEM-E
<Cooling mode> Standard
Flow angle : 30° 4-way flow
ceiling height : 2.7 m

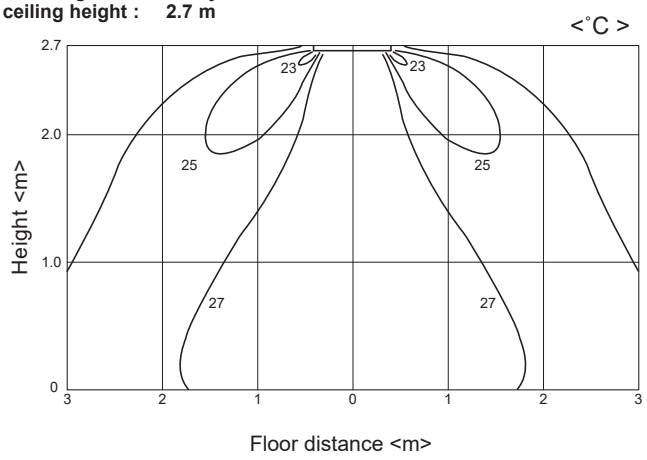

<Heating mode> Standard
Flow angle : 60° 4-way flow
ceiling height : 2.7 m

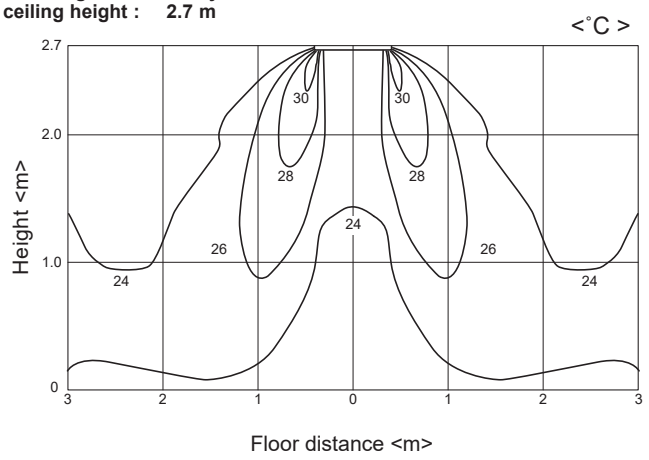

• PLFY-WL50VEM-E
<Cooling mode> Standard
Flow angle : 30° 4-way flow
ceiling height : 2.7 m

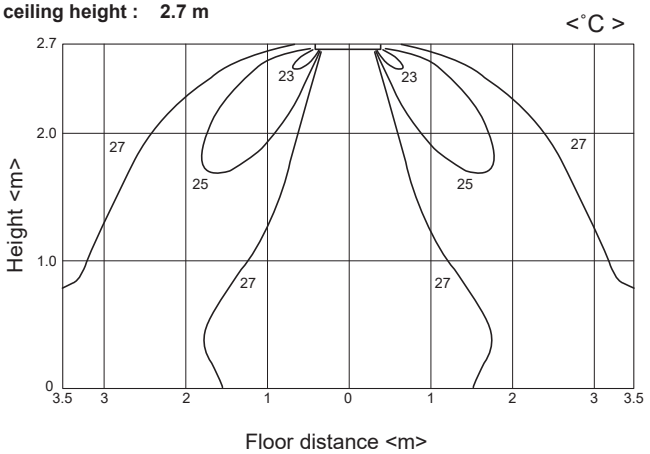

<Heating mode> Standard
Flow angle : 60° 4-way flow
ceiling height : 2.7 m

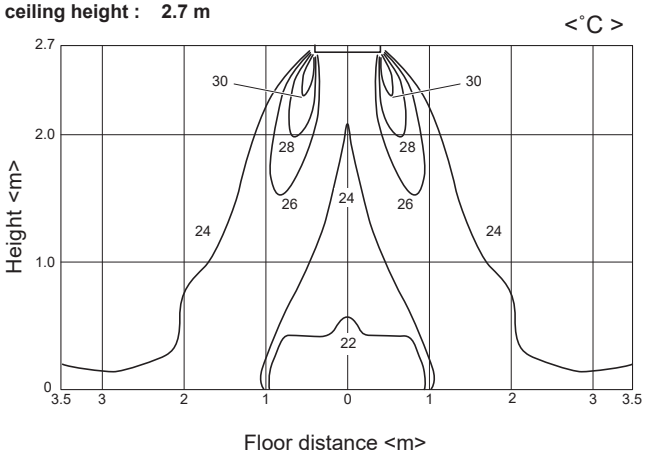

Note : These figures show typical temperature distributions in the conditions above. In the actual installation, they may differ from these figures under the influence of air temperature conditions, ceiling height, cooling/heating load,obstacles,etc.

• **PLFY-WL125VEM-E**
<Cooling mode> Standard
Flow angle : 30° 4-way flow
ceiling height : 3.2 m

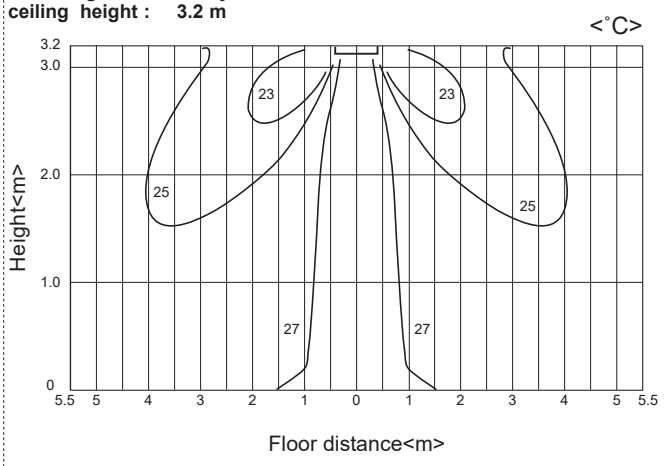

<Heating mode> Standard
Flow angle : 60° 4-way flow
ceiling height : 3.2 m

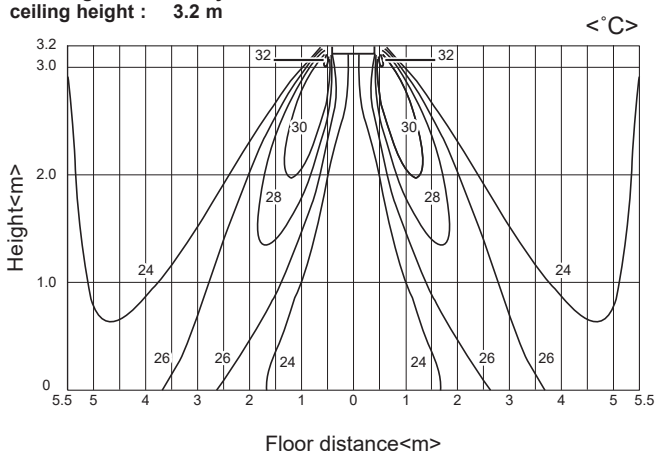

Note : These figures show typical temperature distributions in the conditions above. In the actual installation, they may differ from these figures under the influence of air temperature conditions, ceiling height, cooling/heating load,obstacles,etc.

6-2. Airflow distributions

PLFY-WL32, 40VEM-E

<Cooling mode>
Flow angle 30°

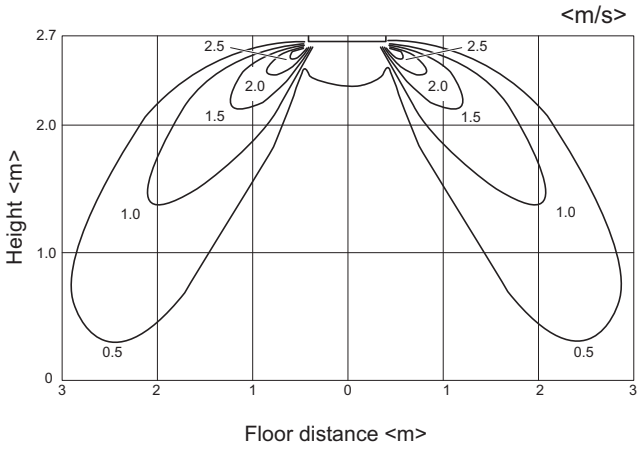

<Heating mode>
Flow angle 60°

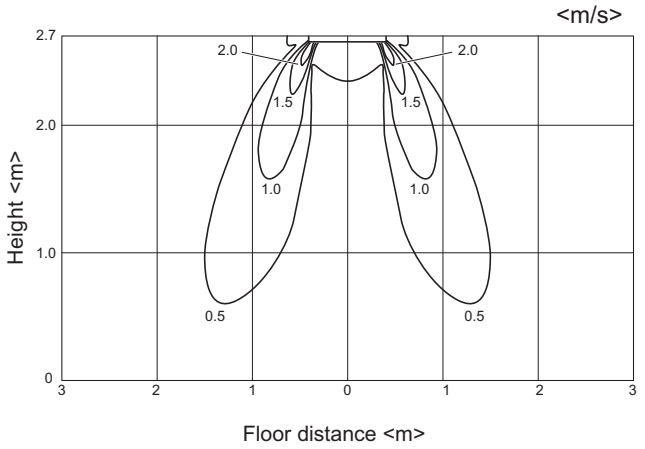

PLFY-WL50VEM-E

<Cooling mode>
Flow angle 30°

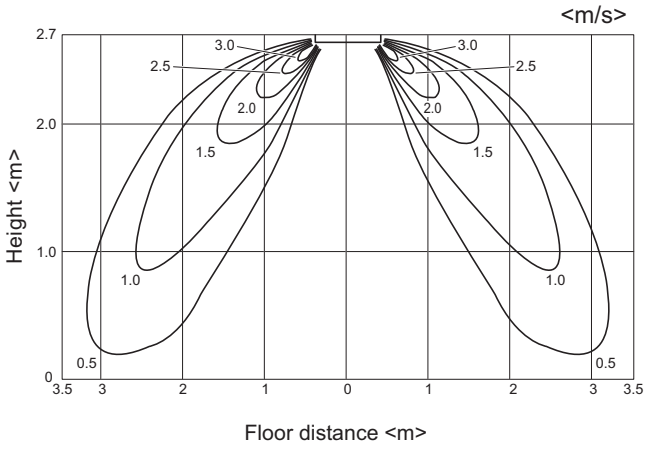

<Heating mode>
Flow angle 60°

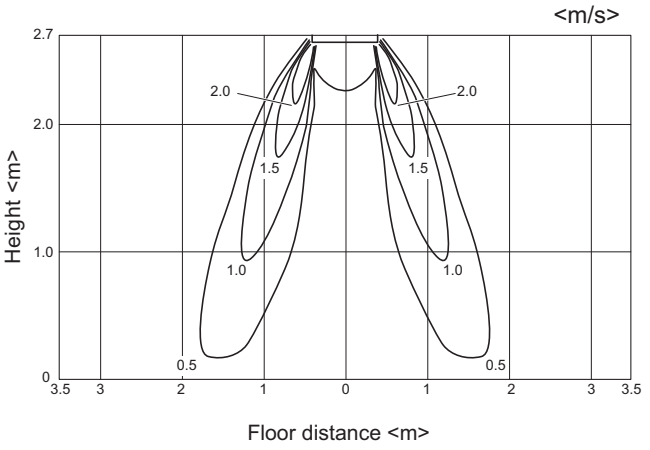

Note : These figures show typical airflow distributions in the conditions above. In the actual installation, they may differ from these figures under the influence of air temperature conditions, ceiling height, cooling/heating load,obstacles,etc.

PLFY-WL125VEM-E

<Cooling mode>
Flow angle 30°

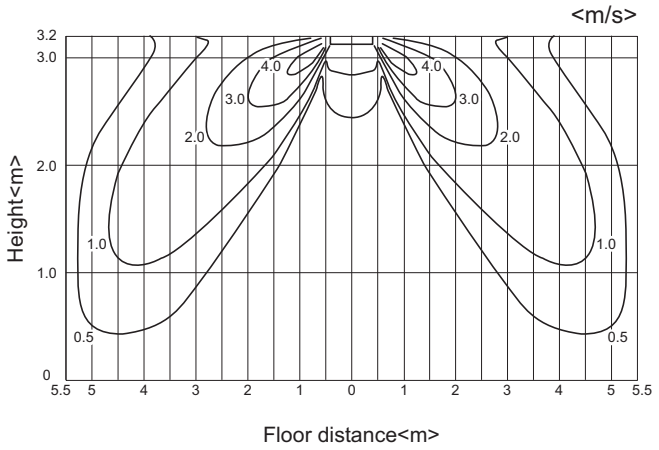

<Heating mode>
Flow angle 60°

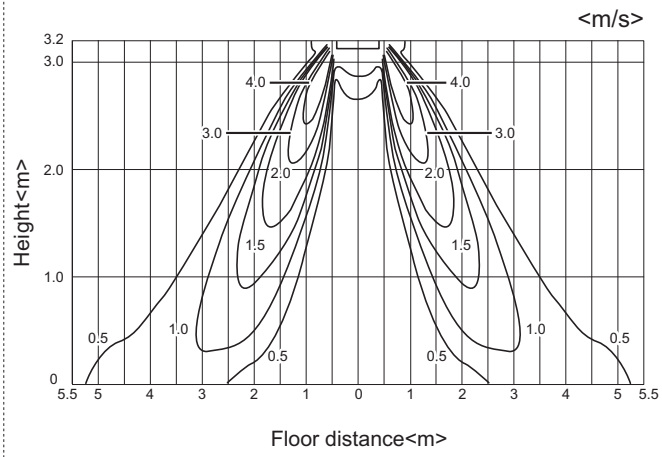

Note : These figures show typical airflow distributions in the conditions above. In the actual installation, they may differ from these figures under the influence of air temperature conditions, ceiling height, cooling/heating load,obstacles,etc.

Symbols: MCA (Max.Circuit Amps =1.25xFLA), FLA (Full Load Amps)
IFM (Indoor Fan Motor), Output (Fan motor rated output)

PLFY-WL-VEM-E	Power supply			IFM	
	Volts/Hz	Range +-10%	MCA(A)	Output (kW)	FLA(A)
PLFY-WL20VEM-E	220-240V/50Hz 220V/60Hz	Max.: 264V Min.: 198V	0.33	0.05	0.26
PLFY-WL25VEM-E			0.37	0.05	0.29
PLFY-WL32VEM-E			0.42	0.05	0.33
PLFY-WL40VEM-E			0.44	0.05	0.35
PLFY-WL50VEM-E			0.50	0.05	0.40
PLFY-WL63VEM-E			0.50	0.12	0.40
PLFY-WL80VEM-E			0.58	0.12	0.46
PLFY-WL100VEM-E			0.83	0.12	0.66
PLFY-WL125VEM-E			1.32	0.12	1.05

8-1. Optional parts line up for the Indoor unit

	Description	Model
PLFY-WL-VEM-E	Air outlet shutter plate	PAC-SJ37SP-E
	Multi-function casement	PAC-SJ41TM-E
	High efficiency filter element	PAC-SH59KF-E
	3D i-see Sensor corner panel	PAC-SE1ME-E
	Auto elevation and signal receiver panel	PLP-6EAJ
	Auto elevation, 3D i-see Sensor and signal receiver panel	PLP-6EAJE
	Wireless signal receiver	PAR-SE9FA-E
	Space panel	PAC-SJ65AS-E
	Duct flange for fresh air intake	PAC-SH65OF-E
	Valve kit	PAC-SK35VK-E
	Attachment plate	PAC-SK39AP-E
	6m Lead wire	PAC-SK40LW-E
	Plasma Quad Connect	PAC-SK51FT-E

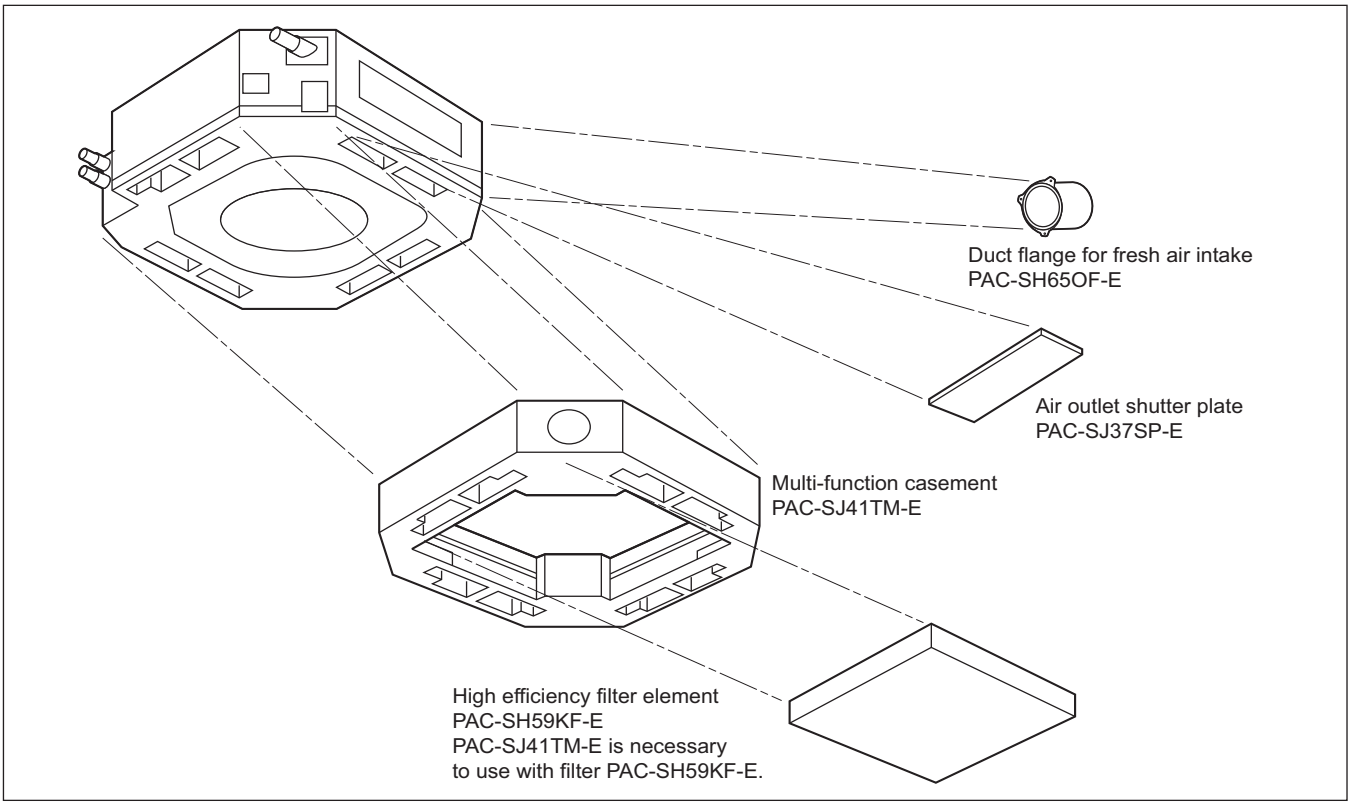

8-2. Air outlet shutter plate

Using the air outlet shutter plate to block the air outlet to modify the air-way from 4 to 3 or 2.
With one shutter plate, 4 air-ways can be changed to 3;
With two shutter plates, 4 air-ways can be changed to 2;
Changing to 1 way is not allowed.
Material: Foamed polyethylene + foamed urethane, color: Black

Item	Shutter plate	Shutter plate	
Quantity	2	1	
Shape	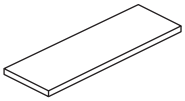	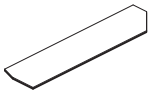	

Detailed installation information should be referred to its Installation Manual.

8-3. High efficiency filter element

Life span: 2,500 hr (Dust concentration 0.15mg/m^3); Colorimetric method 65% (JIS 11 class); No re-production.
* The actual dust situation affects the filter life span, which should be considered at the applying site.
Material: Electrostatic polyolefin fiber
High efficiency filter element PAC-SH59KF-E should be used together with the Multi-function casement PAC-SJ41TM-E. When using PAC-SH59KF-E, switching on SW21-5 of the Indoor unit address board is needed. Details should be referred to its Installation Manual.

Quantity	1	
Shape	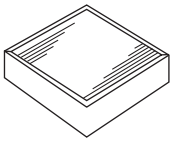	

Detailed installation information is referred in its Installation Manual.

8-4. Multi-function casement

Multi-function casement is used for High efficiency filter element and/or fresh air intake from outdoor.
It should be used with High efficiency filter element PAC-SH59KF-E (Colorimetric method 65%).
Fresh air intake on the Multi-function casement is possible from any 2 or less corners among the 4 ones.
But duct and flange on the casement should be prepare locally.

Item	Multi-functional casement	Screw with washer (black)	Screw	Grille securing bracket
Quantity	1	4	8	4
Shape	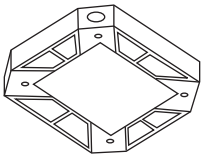	M5 × 0.8 × 25	M5 × 0.8 × 12	With insulator 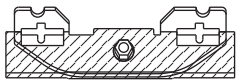

Detailed installation information should be referred to its Installation Manual.

8-5. 3D i-see Sensor corner panel

3D i-see Sensor provides comfortable space as it detects the floor temperature to prevent spotty temperature.
And that enables the unit to save energy.
Attention
Make sure that there are no gaps between the unit and the grille, and the grille and ceiling.
※ It may cause dew dripping.

Item	3D i-see Sensor corner panel	
Quantity	1	
Shape	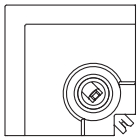	

Detailed installation information should be referred to its Installation Manual.

8-6. Auto elevation panel

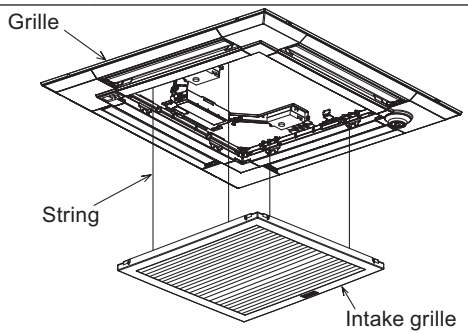

· Air intake grille can be lifted and lowered automatically by wired remote controller (MA type) or wireless remote controller (Item: Wireless remote controller for auto elevation panel).
· Lowering the air intake grille allows you to clean the filter easily.
· You can set up eight different stages of lowering distance for the air intake grille according to the set up location if desired. (Maximum: 4m)

Item	Grille	Installation gauge	Tag	Screw
Quantity	1	1	1	2
Shape	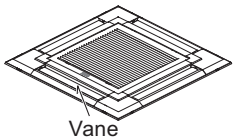 Vane	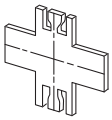 (Used split into four pieces)	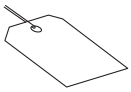	4 × 16 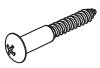
Item	Wireless remote controller for auto elevation panel	Battery	Remote controller holder	
Quantity	1	1	1	
Shape	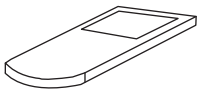	Lithium battery CR2025 3V	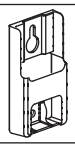	

Grille with 3D i-see Sensor

Item	Screw	3D i-see Sensor corner panel
Quantity	1	1
Parts Grille to Screw above and	4 × 16	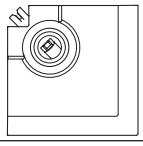

Detailed installation information should be referred to its Installation Manual.

8-7. Wireless signal receiver

Wireless signal receiver PAR-SE9FA-E is necessary for using wireless remote controller		
Item	Wireless signal receiver	
Quantity	1	
Shape	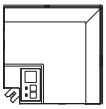	

Detailed installation information should be referred to its Installation Manual.

8-8. Space panel

Decorative cover for the installation when the ceiling height is low.		
Item	Space panel	Gauge for installation
Quantity	2	1
Shape	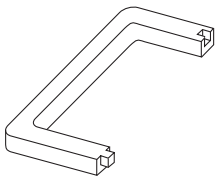	(Split this into four pieces) 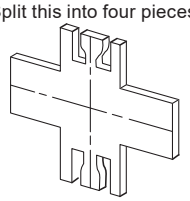

8-9. Duct flange for fresh air intake

Part to attach a duct to take in fresh air from outdoors.			
Item	Duct flange	Insulator	Screws (M4 x 10)
Quantity	1	1	3
Shape	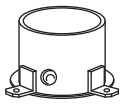	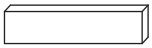	

8-10. Plasma Quad Connect

PAC-SK51FT-E connects to CN105 on the indoor unit. When using an additional optional part, connect it to CN105 of PAC-SK51FT-E.

Item	Plasma Quad Connect	Screw with washer (black)	Screw	Grille securing bracket
Quantity	1	4	8	4
Shape	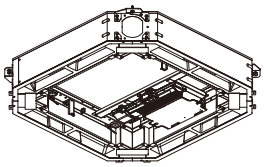	M5 × 0.8 × 25	M5 × 0.8 × 12	With insulator 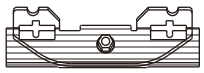

Detailed installation information should be referred to its Installation Manual.

8-11. Valve kit

Valve kit is necessary for using HVRF-Y system
In an HVRF-R2 system, if a valve kit is connected to any of the WL indoor units, all other indoor units must also have a valve.
The table below summarizes the connectability of different combinations of indoor units.

Item	VALVE KIT	Band (large)	Band (small)	Screw
Quantity	1	1	1	8
Shape	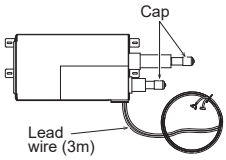	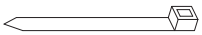	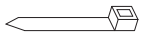	

Outdoor Unit	Indoor Unit			Connection
	A	B	C	
HVRF-R2 System	WLV	WLV	-	Connectable
	WLV	W	-	Connectable
	WLV	WL	-	Not connectable
	WLV	WP	-	Not connectable
	WLV	WL	W	Not connectable
	WLV	WL	WP	Not connectable
	WLV	W	WP	Not connectable
	WL	WL	-	Connectable
	WL	WP	-	Connectable
	WL	W	-	Not connectable
	WL	WP	W	Not connectable
	W	WP	-	Not connectable

WLV = (E)WL-Type (With an optional valve kit)
WL = (E)WL-Type (Without an optional valve kit)
WP = WP-Type (Without a built-in valve and not compatible with the optional valve kit)
W = W-Type (With a built-in valve)

8-12. Attachment plate

When installing the valve kit on the ceiling plate or hanging it from the ceiling, the use of an attachment plate (PAC-SK39AP-E) is recommended.		
Item	Attachment-1	Attachment-2
Quantity	1	1
Shape	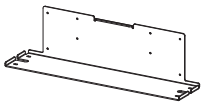	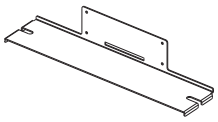

8-13. 6m Lead wire

The lead wire attached to the valve kit is 3 meters. If a longer lead wire is needed, use an optional part PAC-SK40LW-E (6m). Note that the maximum allowable piping distance between the valve kit and the indoor unit is 5 meters.		
Item	Lead wire (6m)	Band (large)
Quantity	1	
Shape	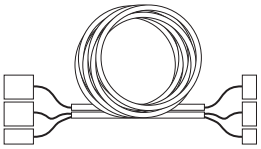	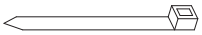

⚠Warning

■ Do not use refrigerant other than the type indicated in the manuals provided with the unit and on the nameplate.
- Doing so may cause the unit or pipes to burst, or result in explosion or fire during use, repair, or at the time of disposal of the unit.
- It may also be in violation of applicable laws.
- MITSUBISHI ELECTRIC CORPORATION cannot be held responsible for malfunctions or accidents resulting from the use of the wrong type of refrigerant.

■ Our air conditioning equipment and heat pumps contain a fluorinated greenhouse gas, R410A/R32.

MITSUBISHI ELECTRIC CORPORATION

www.MitsubishiElectric.com

MEES21K093

New publication effective Nov. 2021
Specifications subject to change without notice