Changes for the Better

SERVICE PARTS LIST FOR MITSUBISHI ELECTRIC CITY MULTI CONNECTION KIT

Series : PAC-LV•M-J

Nov. 2012

BWE012060

INDEX
PAC-LV11M-J

Part information update day : 2012/11/15

MITSUBISHI ELECTRIC

CONNECTION KIT PARTS

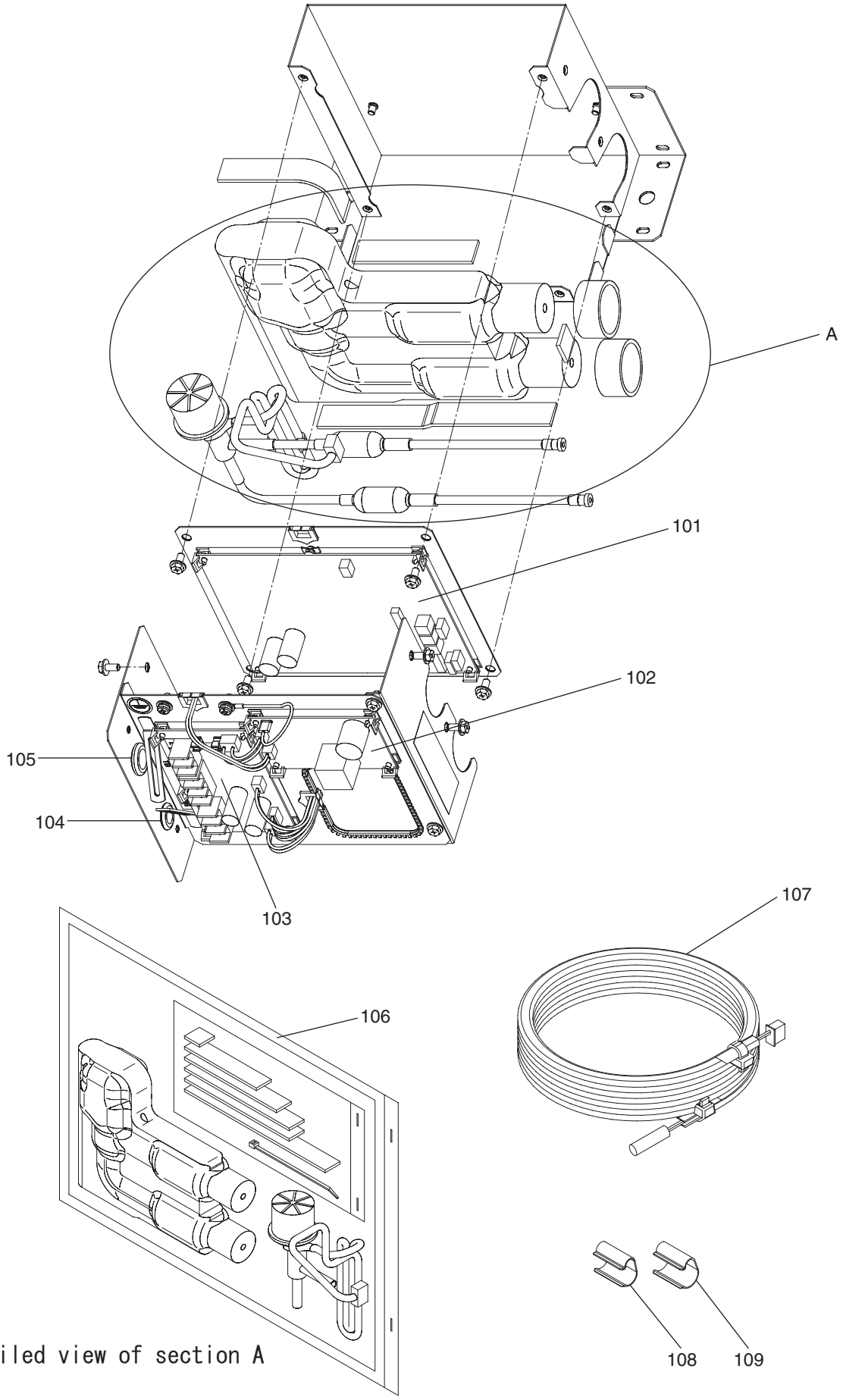

CONNECTION KIT PARTS

No.	Part No.	G : RoHS Apply Only W : RoHS Apply by Running Change	Part Name	Spec.	PAC-LV11M-J						Dwg. No.	Notes for the models	Revision info.
101	R61 228 280	G	Controller board		1						KE80C349G15		
102	R61 230 280	G	Power board		1						P785067X01		
103	R61 231 280	G	At adapter board		1						KE80C777G01		
104	R61 025 104	G	Rubber bush		1						S695007H16		
105	R61 026 104	G	Rubber bush		1						S695007H20		
106	R61 050 401	G	Linear expansion valve assy		1						KD00T608G01		
107	R61 178 200	G	Thermistor		1						KD78H434G01		
108	R61 003 201	G	Thermistor holder	ϕ9.52	1						DU40D344H04		
109	R61 004 201	G	Thermistor holder	ϕ12.7	1						DU40D344H08		

MITSUBISHI ELECTRIC CORPORATION
HEAD OFFICE: TOKYO BLDG., 2-7-3, MARUNOUCHI, CHIYODA-KU, TOKYO 100-8310, JAPAN

BWE012060 (20121130)