■ **PUZ-WM60VAA(-BS) PUZ-WM85VAA(-BS)**
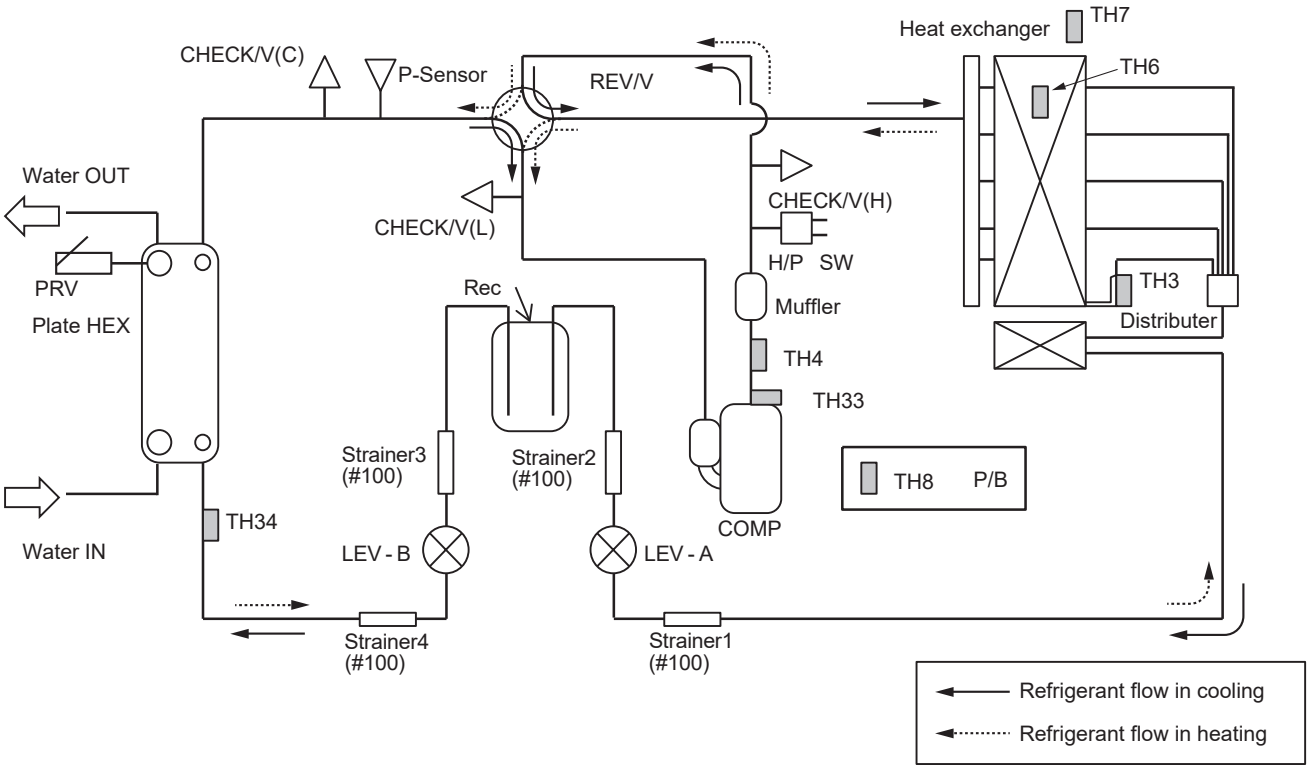
Unit : mm